KEY POWER SUPPLIES LIMITED
+44 (0)1404 45169
Unit F Reme Drive
EX14 1SE

HiTRON

UNIVERSAL AC INPUT HARMONIC CORRECTION AC-DC HALF SIZE HOT-SWAP CompactPCI QUAD OUTPUT 200 WATTS ACTIVE CURRENT SHARING SWITCHING POWER SUPPLIES HAC202P SERIES

FEATURES:

- 200W 3U X 4HP HALF SIZE EUROCARD PACKAGE
- MEET IEC 61000-3-2 HARMONIC CORRECTION
- INTERNAL OR-ING DIODES FOR N+1 REDUNDANCY
- HOT-SWAPPABLE
- THIRD-WIRE CURRENT SHARING
- EMI MEET EN 55022 / FCC CLASS A
- CE MARKING COMPLIANCE
- FULLY COMPLIANT WITH PICMG

SPECIFICATION

INPUT SPECIFICATION

Input Voltage: Typ. 90-264Vac.
Power Factor Correction: Meet Harmonic Correction IEC 61000-3-2.Power Factor typ. 0.98-0.99.
Input Connector: Positronic 47-pin PCIH47M400A1.
Input Frequency: 47-63Hz.
Inrush Current: 6.85Arms at 230Vac 50Hz.
Input Current: 2.45A at 115Vac/1.13A at 230Vac.
Dielectric Withstand: Meet IEC 60950-1 regulation.
EMI: Meet EN 55022 / FCC Class A.
Hold-up Time: 16.8mS at 115Vac/230Vac.
Leakage Current: 0.45mA for IEC60950-1 Touch current.
Remote ON/OFF: Available at [INH#] & [EN#] pins.
Power Fail Signal: Available at [FAL#] pin.
Status LED: <Green> means valid input voltage. <Amber> means a critical fault.
Thermal Protection (OTP): Installed NTC and thermostat for thermal sensor at [DEG#] pin.

OUTPUT SPECIFICATION

Output Voltage: See Ratings Chart.
Output Current: See Ratings Chart.
Output Wattage: Typ. 200W continuous.
Output Connector: Positronic 47-pin PCIH47M400A1.
Line Regulation: Typ. 0.1%.
Load Regulation: Typ. ±1%.
Total Regulation: Typ. ±1.5%.
Noise & Ripple: Typ. 1% peak to peak .
OVP: Built-in at all outputs.
Adjustability: Available at VO1,2&3.
Remote Sensing: Available at VO1,VO2 & VO3.
Hot-Swap: Available.
N+1 Redundancy: Installed with internal OR-ing diodes at all outputs for N+1 redundancy operation.
Current Sharing: Third-wire current sharing at VO1,2 &3.
Power OK Signal: Available for all output.
Over Current Protection (OCP): Installed at each rail.
Overload Protection (OLP): Fully protected against output overload or short circuit. Typical 115-135% max. load. Consult the factory for special OLP setting.

GENERAL SPECIFICATION

Efficiency: Typical 77 %.
Switching Frequency: 125K Hz.
Circuit Topology: Forward circuit.
Transient Response: Peak transient less than 105mV and recovers within 0.084mS after 25% load-change.
Safety Standard: IEC 60950-1 Class I.
Construction: Eurocard 3U X 4HP X 160mm CompactPCI.
Operating Temperature: 0 to +50 °C at full load with specified air flow. Derates linearly to 50% at +70 °C.
Storage Temperature: -40 to +85 °C.
Temperature Coefficient: Typ. ±0.02% / °C.
Cooling: At least 30CFM(800 LFM) moving air is required to achieve full rating power 200W in a confined area.
Power Density: 7.4 Watts/ Cubic Inch.

NOTE: (1)All measurement are at nominal input, full load and +25℃ unless otherwise specifications.
(2)Due to requests in market and advances in technology, specifications subject to change without notification.

In application.

OUTPUT VOLTAGE / CURRENT RATINGS CHART

QUAD OUTPUT

MODEL NO.	MAIN +VO1 @★#≡⊙				AUX. +VO2 ▲@★#≡⊙※				AUX. +VO3 ▲≡#⊙★@					AUX. –VO4 ⊙★▲				
	Min.	Typ.	**Volt.**	Max.	Min.	Typ	**Volt.**	Max	Min.	Typ	**Volt.**	Max.	Pk.	Min.	Typ.	**Volt.**	Max.	Pk.
HAC202P-490	2A	25A	**+5V**	27A	0A	10A	**+3.3V**	20A	0A	3A	**+12V**	5A	6A	0A	0.5A	**-12V**	1A	1A

Symbol: "★" OVP built-in. "@" Adjustable. "#" Remote sensing. "≡" 3rd-wire Load Sharing.
"⊙" Installed with Or-ing diode. "▲" Magnetic Amplifier. "※" Synchronous Rectifier.

Remark: Peak load less than 60sec. with duty cycle <10%.
Max. load is the continuous operating load of each rail. But the max. load of each rail can't be drawn from all outputs at the same time.
Total max. power of V1 and V2 should be less than 175Watt.

MECHANICAL DIMENSIONS: MM [INCHES]

WEIGHT: 700.0 g (24.7 Oz.)

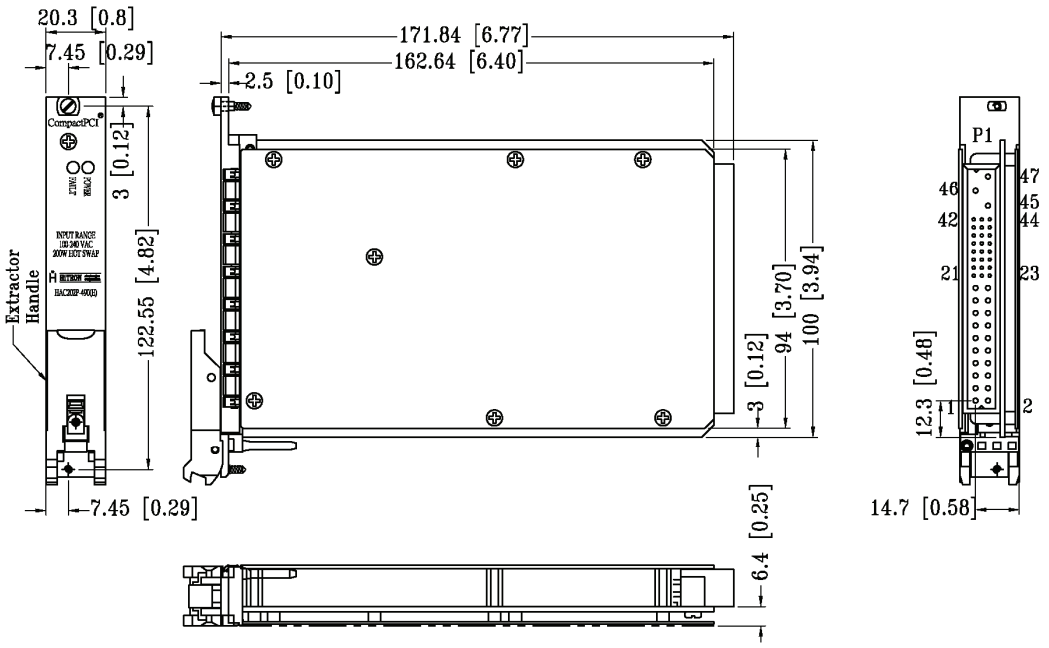

INPUT & OUTPUT CONNECTORS PIN ASSIGNMENT

	AC INPUT			QUAD OUTPUT															STATUS/CONTROL			
ASSIGNMENT	**L**	**N**	**G**	**VO1**	**5V S+**	**5V S-**	**5V Adj.**	**C.S.**	**VO2**	**3.3V S+**	**3.3V S-**	**3.3V Adj.**	**C.S.**	**VO3**	**+12V S+**	**C.S**	**VO4**	**DC COM**	**EN#**	**DEG#**	**INH#**	**FAL#**
CNTR &PIN #	47	46	45	1,2, 3,4	30	34	29	35	13,14, 15,16, 17,18	33	34	32	41	20	36	44	21	5,6,7,8,9, 10,11,12, 19,24	27	38	39	42

Mating connector: PCIH47F400A1.