KEY POWER SUPPLIES LIMITED
+44 (0)1404 45169
Unit F Reme Drive
EX14 1SE

HiTRON

UNIVERSAL AC INPUT HARMONIC CORRECTION AC-DC HOT-SWAP CompactPCI QUAD OUTPUT 250 WATTS ACTIVE CURRENT SHARING SWITCHING POWER SUPPLIES HAC250P SERIES

FEATURES:

- 250W 3U X 8HP EUROCARD PACKAGE
- MEET IEC 61000-3-2 HARMONIC CORRECTION
- INTERNAL OR-ING DIODES FOR N+1 REDUNDANCY
- HOT-SWAPPABLE
- THIRD-WIRE CURRENT SHARING
- EMI MEET EN 55022 / FCC CLASS A
- CE MARKING COMPLIANCE
- FULLY COMPLIANT WITH PICMG

SPECIFICATION

INPUT SPECIFICATION

Input Voltage: Typ. 90-264Vac.
Power Factor Correction: Meet Harmonic Correction IEC 61000-3-2.Power Factor typ. 0.95-0.97.
Input Connector: Positronic 47-pin PCIH47M400A1.
Input Frequency: 47-63Hz.
Inrush Current: Less than 30A at 230Vac.
Input Current: 2.8A at 115Vac/1.4A at 230Vac.
Dielectric Withstand: Meet IEC 60950-1 regulation.
EMI: Meet EN 55022 / FCC Class A.
Hold-up Time: 5mS after power fail signal.
Earth Leakage: Less than 0.5mA at 230Vac.
Remote ON/OFF: Available at [INH#] & [EN#] pins.
Power Fail Signal: Available at [FAL#] pin.
Status LED: <Green> means valid input voltage. <Amber> means a critical fault.
Thermal Protection (OTP): Installed NTC and thermostat for thermal sensor at [DEG#] pin.

OUTPUT SPECIFICATION

Output Voltage: See Ratings Chart.
Output Current: See Ratings Chart.
Output Wattage: Typ. 250W continuous.
Output Connector: Positronic 47-pin PCIH47M400A1.
Line Regulation: Typ. 0.1%.
Load Regulation: Typ. ±1-±4%. (Various with output voltage.)
Noise & Ripple: Typ. 1% peak to peak or 50mV, whichever is greater.
OVP: Built-in at all outputs.
Adjustability: Available at VO1,2 & 3.
Output Trim: Electrical trim available at VO1/VO2.[ADJ #]
Remote Sensing: Available at VO1,VO2 & VO3.
Hot-Swap: Available.
N+1 Redundancy: Installed with internal OR-ing diodes at all outputs for N+1 redundancy operation.
Current Sharing: Third-wire current sharing at VO1,2 &3.
Power OK Signal: Available for all output.
Over Current Protection (OCP): Installed at each rail.
Overload Protection (OLP): Fully protected against output overload or short circuit. Typical 120% max. load. Consult the factory for special OLP setting.

GENERAL SPECIFICATION

Efficiency: Typ. 78%.
Switching Frequency: 120K Hz.
Circuit Topology: Forward circuit.
Transient Response: Peak transient less than 100mV and recovers within 2mS after 25% load-change.
Safety Standard: IEC 60950-1 Class I.
Construction: Eurocard 3U X 8HP X 160mm CompactPCI format. Front Panel with either Ordinary handle or Extractor handle.

Operating Temperature: 0 to +50 °C at full load with specified air flow. Derates linearly to 50% at +70 °C.
Storage Temperature: -40 to +85 °C.
Temperature Coefficient: Typ. ±0.02% / °C.
Cooling: At least 20 CFM(600 LFM) moving air is required to achieve full rating power 250W in a confined area.
Power Density: 4.58 Watts/ Cubic Inch.

NOTE: (1)All measurement are at nominal input, full load and +25℃ unless otherwise specifications.
(2)Due to requests in market and advances in technology, specifications subject to change without notification.

For the details of safety approval, please consult the factory

OUTPUT VOLTAGE / CURRENT RATINGS CHART

QUAD OUTPUT

MODEL NO.	MAIN +VO1 @★#≡⊙				AUX. +VO2 ▲@★#≡⊙				AUX. +VO3 ▲≡#⊙★@					AUX. –VO4 ●⊙★■=				
	Min.	Typ.	**Volt.**	Max.	Min.	Typ.	**Volt.**	Max.	Min.	Typ.	**Volt.**	Max.	Pk.	Min.	Typ.	**Volt.**	Max.	Pk.
HAC250P-490(E)	2A	25A	**+5V**	33A	0A	18A	**+3.3V**	33A	0A	5A	**+12V**	5.5A	6A	0A	0.5A	**-12V**	1A	1.5A
HAC250P-490(O)	2A	25A	**+5V**	33A	0A	18A	**+3.3V**	33A	0A	5A	**+12V**	5.5A	6A	0A	0.5A	**-12V**	1A	1.5A

Symbol: "★" OVP built-in. "@" Adjustable. "#" Remote sensing. "≡" 3rd-wire Load Sharing. "=" Droop Current Sharing.
"⊙" Installed with Or-ing diode. "▲" Magnetic Amplifier. "●" Installed with Post-regulator. "■" Common Choke.

Remark: 1.Peak load less than 60sec. with duty cycle <10%.
2.Max. load is the continuous operating load of each rail. But the max. load of each rail can't be drawn from all outputs at the same time.
3.Please consult the factory if you have the special min load request of VO1.

MECHANICAL DIMENSIONS: MM [INCHES] WEIGHT: 666.0 g (23.5 Oz.)

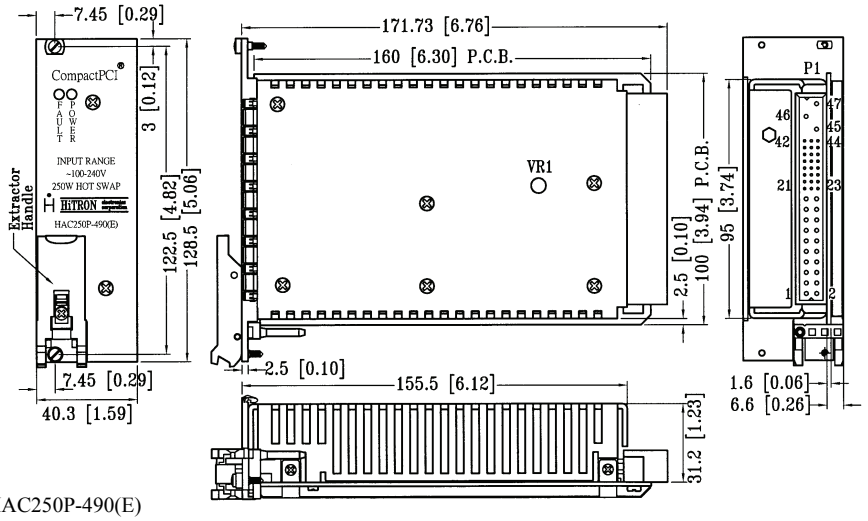

HAC250P-490(E)

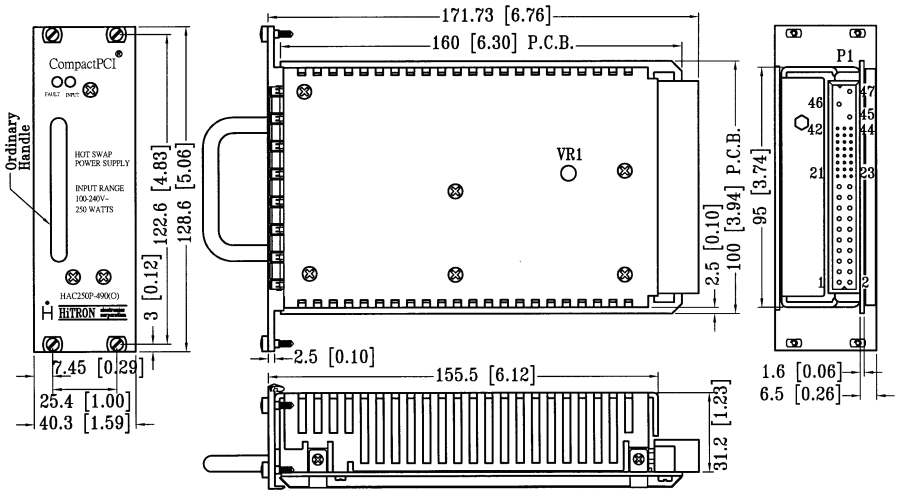

HAC250P-490(O)

INPUT & OUTPUT CONNECTORS PIN ASSIGNMENT

	AC INPUT			QUAD OUTPUT														STATUS/CONTROL			
ASSIGNMENT	**L**	**N**	**G**	**VO1**	**S+**	**S-**	**Adj.**	**C.S.**	**VO2**	**S+**	**Adj.**	**C.S.**	**VO3**	**S+**	**C.S**	**VO4**	**DC COM**	**EN#**	**DEG#**	**INH#**	**FAL#**
CNTR &PIN #	47	46	45	1,2, 3,4	30	34	29	35	13,14, 15,16, 17,18	33	32	41	20	36	44	21	5,6,7,8,9, 10,11,12, 19,24	27	38	39	42

Mating connector: PCIH47F400A1.